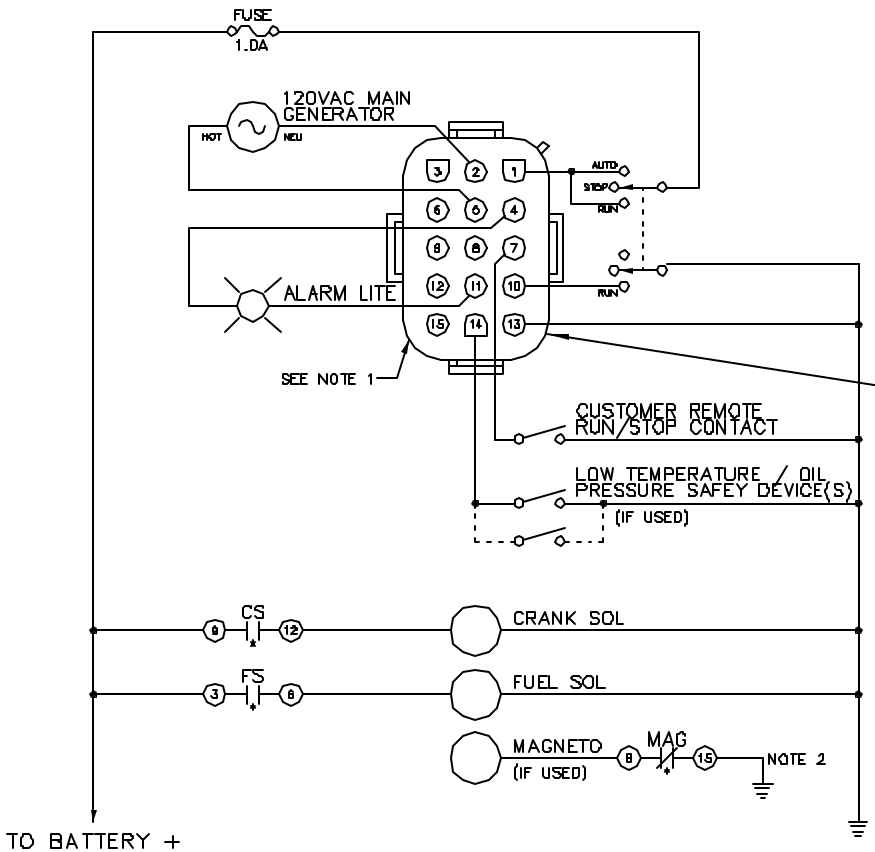

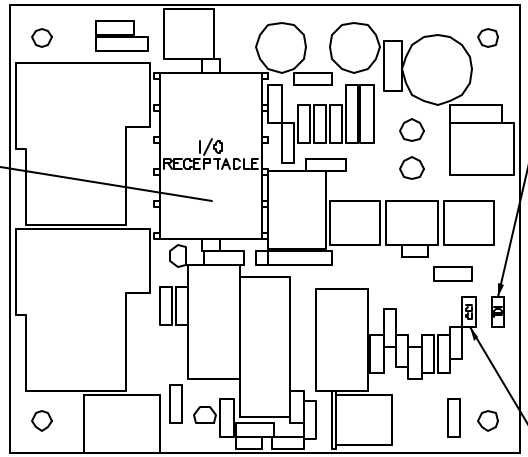

START-UP TIME DELAY SELECT

TO ADD A 5 SECOND TIME DELAY ON THE ENGINE START-UP (REMOTE START ONLY), CUT THE "TDI" JUMPER WIRE.

CRANKING SELECT

THE REMOTE START/STOP BOARD IS SHIPPED CONFIGURED FOR A SINGLE CRANK PERIOD OF 30 SECONDS. TO CONVERT TO CYCLE CRANKING, CUT THE "CCI" JUMPER WIRE AS SHOWN.

NOTES:

1.) CUSTOMER TO SUPPLY AMP 1-480710-1 PLUG WITH (15) 350550-1 SOCKET CONNECTORS. VIEW SHOWN FROM BACK (WIRING END) OF PLUG.

2.) MAGNETO GROUND MUST BE KEPT SEPARATE FROM CONTROL GROUND (PIN 13.)

* MAG, CS, AND FS ARE RELAY CONTACTS LOCATED WITHIN THE ENGINE CONTROL.

Bouchette Electronics, Inc.
N11325 County Highway Y Clintonville, WI 54929

TITLE CONNECTION DIAGRAM – RSS4 REMOTE START/STOP CONTROL			
DATE 12/28/99	DWN BY DSB	CHK TJB	SCALE NONE
P/N	CAD REF	DWG NO E205-1	